EVOLUTION® 200 TECHNOLOGY

The Evolution 200 with it's three stage grind technology & SoundSealTM Plus, makes it our most powerful & quietest model. Don't worry about what you can and can' t grind... the Evolution 200 grinds all food waste.

FEATURES

- SoundSeal Plus™ Evolution Ultra-Quiet Technology
- 0.75HP Dura-Drive™ Heavy Duty Induction Motor
- MultiGrind Plus™ 3 Stage Stainless Grinding System with Auto Reverse Action
- QuickLock™ Sink Mount for easy installation
- Largest Capacity (1180ml) Stainless Steel Grinding Chamber
- 10 Year Warranty
- Micro Processor delivers more power to boost the grinding capability.
- Made in the USA
- Built-in Air Switch (33mm hole for button)

SPECIFICATIONS

Type of Feed	Continuous
On/Off	Control Wall Switch or Built-In Air Switch
Power Supply	Single Phase
Reversing	Auto-Reverse Grind System
Time Rating	Intermittent
Lubrication	Permanently Lubricated Upper & Lower Bearings
Shipping Weight	11.6 kg (Approx.)
Unit Finish	Stainless Steel Light Grey TEN-1706
Overall Height	344 mm
Grind Technology	3-Stage Grind Technology Power Booster Circuit with Microprocessor

Sound Technology	Anti-Vibration Mounting Technology and Tailpipe Quiet Sink Baffle Multi-Layer Sound Insulation
Plug	Stainless Steel Strainer Basket and Plug
Grind Chamber Capacity	1180 ml
Motor Protection	Manual Reset Overload
Average Water Usage	Approximately 4.0 L per Person per Day
Average Electrical Usage	3-4 KWH per Annum
Drain Connection	1-1/2" (3.81 cm) Anti-Vibration (Hose Clamp)
Dishwasher Connection	Yes

Volts/Hz	HP	RPM
220-240V, 50 Hz	.75	1425

DIMENSIONS (MM)

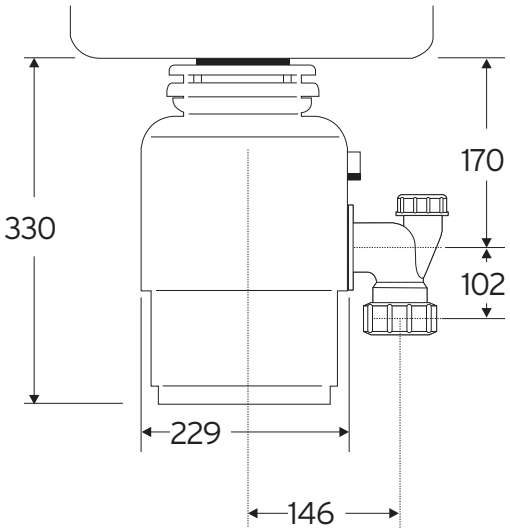

insinkerator.co.nz

For more information contact Parex Industries Limited on Tel: 0800 200 510 or email: info.parex@emerson.com

insinkerator®